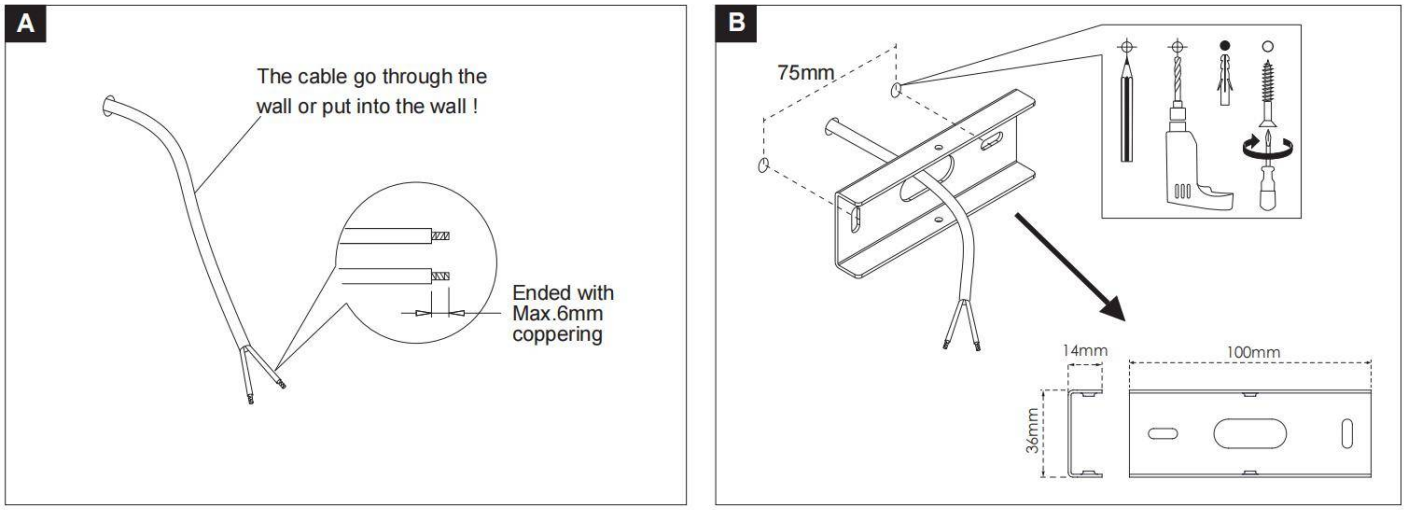
A
The cable go through the wall or put into the wall !
Ended with Max.6mm coppering

B
75mm
14mm
100mm
36mm

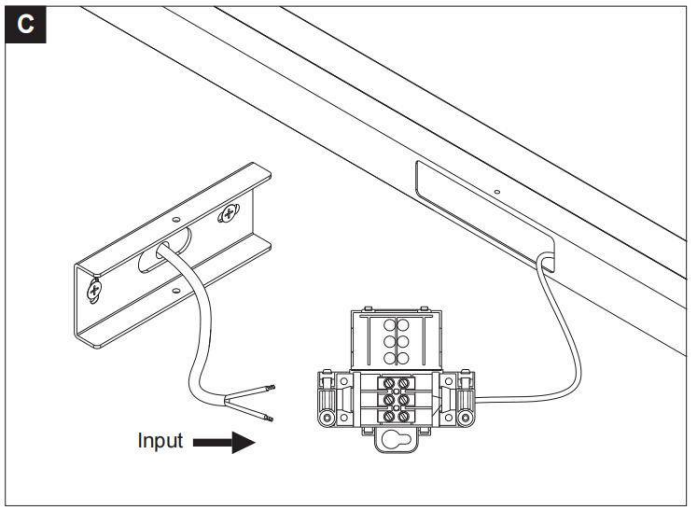
C
Input

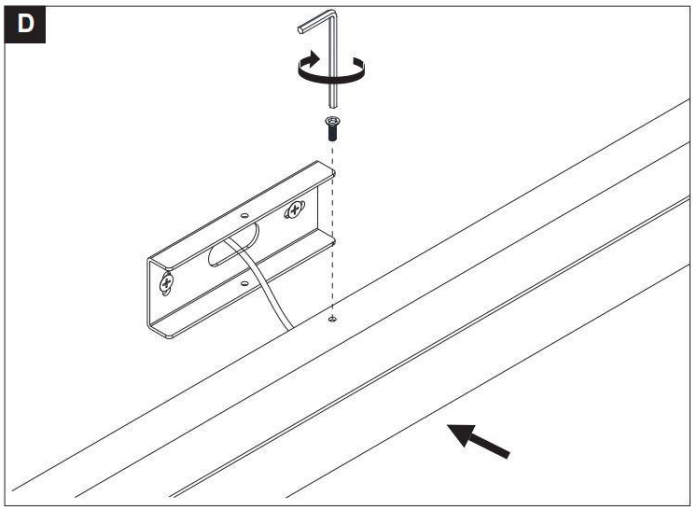
D

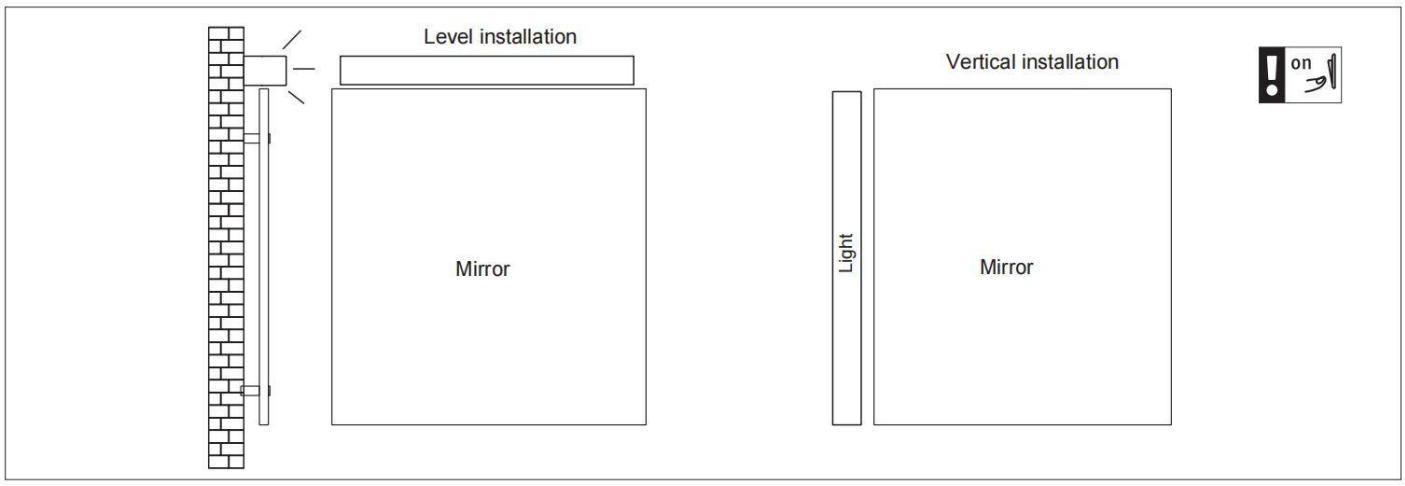
Level installation
Mirror
Vertical installation
Light
Mirror
on